AFX24-MFT95 N4 - Damper Actuator

NEMA 4, Modulating, Spring Return, 24 V, 0 to 135 Ω Input

Torque min. 180 in-lb, Control fixed, 0 to 135 Ω input, or Honeywell series 90 (fixed), Feedback 2 to 10 VDC (DEFAULT).

Application

For fail-safe, modulating control of dampers in HVAC systems. Actuator sizing should be done in accordance with the damper manufacturer's specifications. A feedback signal is provided for position indication for master-slave applications. Two AF's can be piggybacked for torque loads of up to 360 in-lbs. Minimum 3/4" diameter shaft. OR Maximum of three AF's can be piggybacked for torque loads of up to 432 in-lbs. Minimum 3/4" diameter shaft. Master-Slave wiring for either configuration.

Default/Configuration

Default parameters for 0 to 135Ω input applications of the AF..-MFT95 actuator are assigned during manufacturing. If required, custom versions of the actuator can be ordered, however the control input cannot be modified via MFT PC tool software. The other parameters are variable and can be changed by three means: Factory pre-set or custom configuration, set by the customer using PC-Tool software or the handheld ZTH US.

Operation

The AF..24-MFT95 N4 actuator provides 95° of rotation and is provided with a graduated position indicator showing 0° to 95°. The actuator will synchronize the 0° mechanical stop or the physical damper or valve mechanical stop and use this point for its zero position during normal control operations. A unique manual override allows the setting of any actuator position within its 95° of rotation with no power applied.This mechanism can be released physically by the use of a crank supplied with the actuator. When power is applied the manual override is released and the actuator drives toward the fail-safe position. The actuator uses a brushless DC motor which is controlled by an Application Specific Integrated Circuit (ASIC) and a microprocessor. The microprocessor provides the intelligence to the ASIC to provide a constant rotation rate and to know the actuator's exact position. The ASIC monitors and controls the brushless DC motor's rotation and provides a Digital Rotation Sensing (DRS) function to prevent damage to the actuator in a stall condition. The position feedback signal is generated without the need for mechanical feedback potentiometers using DRS. The actuator may be stalled anywhere in its normal rotation without the need of mechanical end switches. The AF..24-MFT95 N4 is mounted directly to control shafts up to 1.05" diameter by means of its universal clamp and anti-rotation bracket. The spring return system provides minimum specified torque to the application during a power interruption. The AF..24-MFT95 N4 actuator is shipped at 5° (5° from full fail-safe) to provide automatic compression against damper gaskets for tight shut-off.

Installation Note: Use suitable flexible metallic conduit or its equivalent with the conduit fitting. Not suitable for plenum applications.

Technical Data

Power Supply	24 VAC±20%, 50/60Hz, 24 VDC+20%/-10%
Power Consumption Running	7.5 W
Power Consumption Holding	3 W
Transformer Sizing	10 VA (class 2 power source)
Shaft Diameter	1/2" to 1.05" round, centers on 3/4" with insert, 1.05" without insert
Electrical Connection	3 ft [1 m], 18 GA plenum cable with 1/2" conduit connector
Overload Protection	electronic throughout 0° to 95° rotation
Electrical Protection	actuators are double insulated
Operating Range Y	0 to 135 Ω Honeywell Electronic Series 90, 0 to 135 Ω input
Feedback Output U	2 to 10 VDC, 0.5 mA max, VDC variable
Angle of Rotation	95° (adjustable with mechanical end stop, 35° to 95°)
Torque	180 in-lbs [20 Nm] minimum
Direction of Rotation (Motor)	reversible with built-in switch
Direction of Rotation (Fail-Safe)	reversible with CW/CCW mounting
Position Indication	dial
Manual Override	5 mm hex crank (3/16" Allen), supplied
Running Time (Motor)	150 sec (default), variable (70 to 220 sec)
Running Time (Fail-Safe)	<20 sec @ -4°F to 122°F [-20°C to 50°C], < 60 sec @ -22°F [-30°C]
Angle of Rotation Adaptation	Off (default)
Override Control	min. position = 0% , mid. Position = 50% , max. position = 100% (Default)
Humidity	100% condensing
Ambient Temperature Range	-22°F to 122°F [-30°C to 50°C]
Storage Temperature Range	-40°F to 176°F [-40°C to 80°C]
Housing	NEMA 4, IP66, UL enclosure type 4
Housing Material	polycarbonate
Agency Listings†	cULus acc. to UL60730-1A/-2-14, CAN/CSA E60730-1:02, CE acc. to 2004/108/EC
Noise Level (Motor)	≤40 dB (A) @ 150 sec, run time dependent
Noise Level (Fail-Safe)	<62 dB (A)
Servicing	maintenance free
Quality Standard	ISO 9001
Weight	9.7 lb [4.4 kg]

*Variable when configured with MFT options.
†Rated Impulse Voltage 800V, Type of action 1.AA, Control Pollution Degree 4.

Dimensions (Inches[mm])

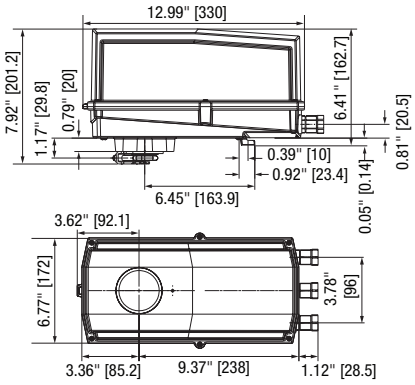

Date created, 11/07/2016 - Subject to change. © Belimo Aircontrols (USA), Inc.

AFX24-MFT95 N4 - Damper Actuator

NEMA 4, Modulating, Spring Return, 24 V, 0 to 135 Ω Input

Accessories

AF-P	Anti-rotation bracket AF/NF.
KG10A	Ball joint for 3/8” diameter rod, zinc plated.
KH10	Univ. crankarm, slot 21/64” w, for 9/16” to 1” dia. shafts.
SH10	Push rod for KG10A ball joint (36” L, 3/8” diameter).
TOOL-06	8 mm and 10 mm wrench.
TOOL-07	13 mm wrench.
ZG-DC1	Damper clip for damper blade, 3.5” width.
ZG-DC2	Damper clip for damper blade, 6” width.
ZG-JSA-1	1” diameter jackshaft adaptor (11” L).
ZG-JSA-2	1-5/16” diameter jackshaft adaptor (12” L).
ZG-JSA-3	1.05” diameter jackshaft adaptor (12” L).
11097-00001	Gasket for cable gland (for NEMA 4 models).
43442-00001	Cable gland (for NEMA 4 models).
MFT-P	Belimo MFT configuration software (hardware not included).
PS-100	Actuator power supply and control simulator.
ZG-R03	MFT95 resistor kit for 0 to 135Ω control applications.
ZG-X40	120 to 24 VAC, 40 VA transformer.
ZK2-GEN	Cable for ZTH US to actuators w/o diagnostics socket.
ZTH US	Handheld programming tool w/ ZK1-GEN, ZK2-GEN, ZK6-GEN.

Typical Specification

Spring return control damper actuators shall be direct coupled type which require no crank arm and linkage and be capable of direct mounting to a jackshaft up to a 1.05” diameter. The actuator must provide modulating damper control in response to a 0 to 135 ohm control input from a Honeywell Series 90 controller or equivalent. The actuators must be designed so that they may be used for either clockwise or counter clockwise fail-safe operation. Actuators shall use a brushless DC motor controlled by a microprocessor and be protected from overload at all angles of rotation. Run time shall be constant, and independent of torque. A 2 to 10 VDC feedback signal shall be provided for position feedback or master slave applications. Actuators shall be cULus listed and have a 5 year warranty, and be manufactured under ISO 9001 International Quality Control Standards. Actuators shall be as manufactured by Belimo.

Wiring Diagrams

WARNING! LIVE ELECTRICAL COMPONENTS!

During installation, testing, servicing and troubleshooting of this product, it may be necessary to work with live electrical components. Have a qualified licensed electrician or other individual who has been properly trained in handling live electrical components perform these tasks. Failure to follow all electrical safety precautions when exposed to live electrical components could result in death or serious injury.

Meets cULus requirements without the need of an electrical ground connection.

1 Provide overload protection and disconnect as required.

3 Actuators may also be powered by 24 VDC.

22 Actuators and controller must have separate transformers.

23 Consult controller instruction data for more detailed information.

24 Resistor value depends on the type of controller and the number of actuators. No resistor is used for one actuator. Honeywell® resistor kits may also be used.

25 To reverse control rotation, use the reversing switch.

46 Actuators may be controlled in parallel. Current draw and input impedance must be observed.

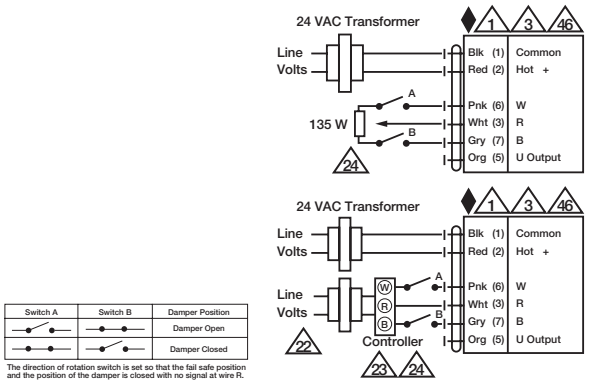

Typical and Override Control

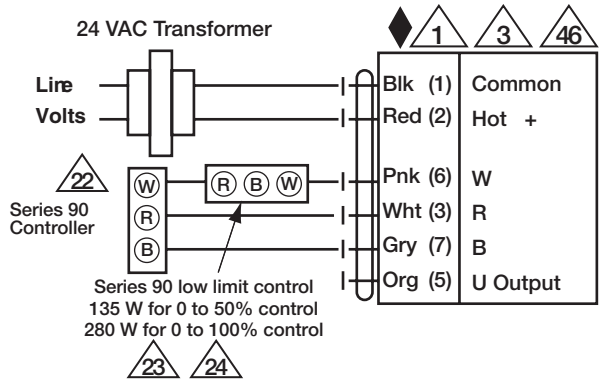

Low Limit Control

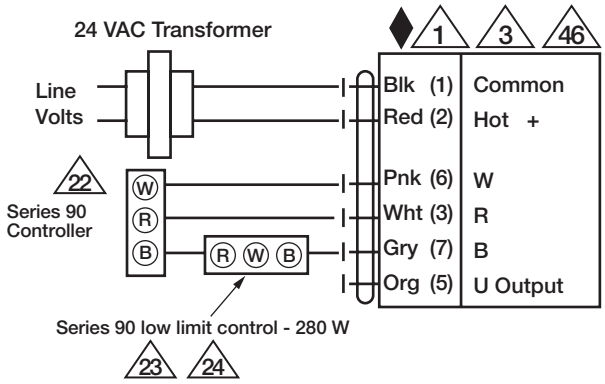

High Limit Control

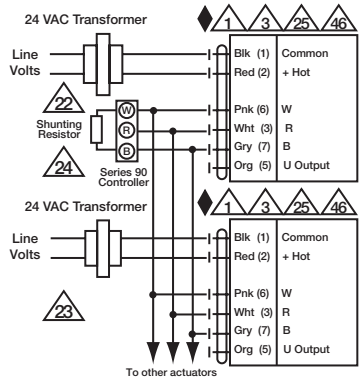

No. of actuators	Resistance
2	140 W
3	71.5 W
4	47.5 W
5	37.5 W
6	28 W

Resistor Kit No. ZG-R03

Multiple Actuators

Date created, 11/07/2016 - Subject to change. © Belimo Aircontrols (USA), Inc.

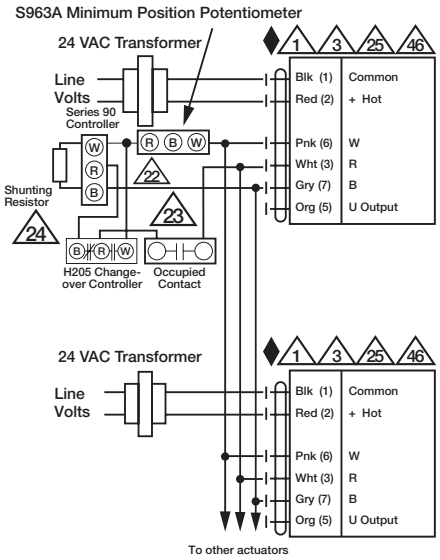

Multiple Actuators with Minimum Position Potentiometer

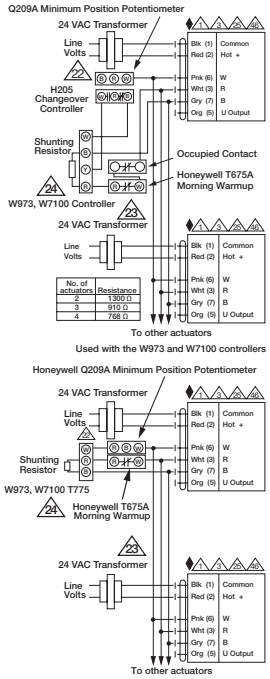

Multiple Actuators Used with W973, W7100 and T775

Date created, 11/07/2016 - Subject to change. © Belimo Aircontrols (USA), Inc.