B209, 2-Way, Characterized Control Valve
Stainless Steel Ball and Stem

Application
This valve is typically used in air handling units on heating or cooling coils, and fan coil unit heating or cooling coils. Some other common applications include Unit Ventilators, VAV box re-heat coils and bypass loops. This valve is suitable for use in a hydronic system with variable flow.

Suitable Actuators

	Non-Spring	Spring
B209	TR, LR, NR	TFR, LF

Technical Data

Service	chilled, hot water, up to 60% glycol
Flow Characteristic	equal percentage
Controllable Flow Range	75°
Size [mm]	0.5” [15]
End Fitting	NPT female ends
Body	forged brass, nickel plated
Ball	stainless steel
Stem	stainless steel
Stem Packing	EPDM (lubricated)
Seat	Teflon® PTFE
Seat O-ring	EPDM (lubricated)
Characterized Disc	TEFZEL®
Body Pressure Rating [psi]	600
Media Temperature Range (Water)	0°F to 250°F [-18°C to 120°C]
Max Differential Pressure (Water)	50 psi (345 kPa)
Close-Off Pressure	200 psi
Cv	0.8
Weight	0.4 lb [0.2 kg]
Leakage	0% for A to AB
Servicing	maintenance free

Dimensions (Inches [mm])

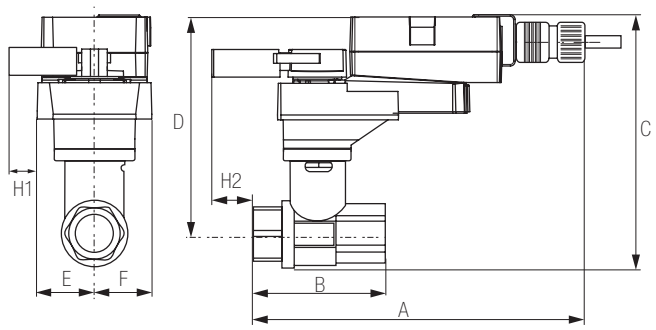

LRB, LRX

A	B	C	D	E	F	H1	H2
9.4” [239]	2.38” [60]	5.19” [132]	4.61” [117]	1.3” [33]		1.18” [30]	1.1” [28]

Flow Pattern

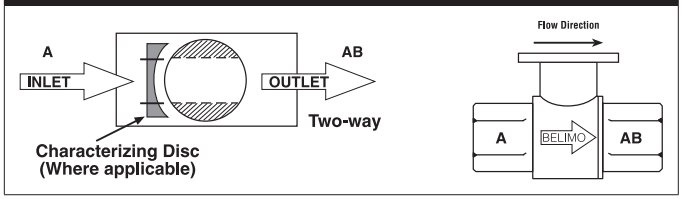

Date created, 10/07/2016 - Subject to change. © Belimo Aircontrols (USA), Inc.

Dimensions (Inches [mm])

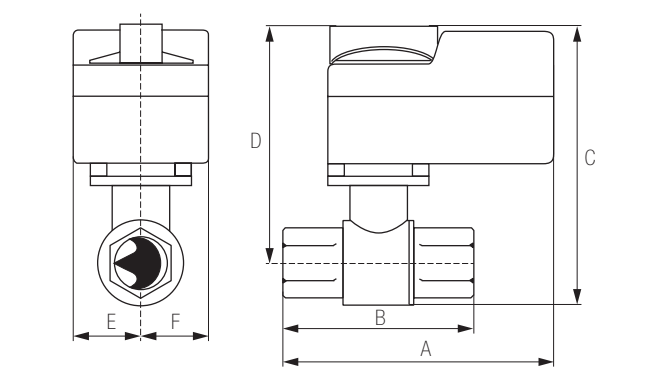

TR

A	B	C	D	E	F
3.72” [95]	2.38” [60]	4.79” [122]	4.21” [107]	1.25” [32]	

Dimensions (Inches [mm])

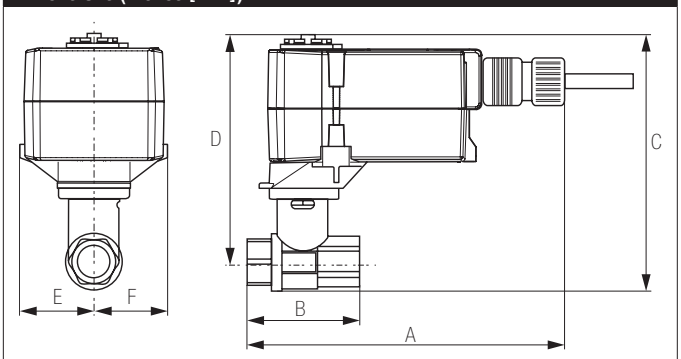

NRB N4, NRX N4

A	B	C	D	E	F
11.36” [289]	2.38” [60]	7.68” [195]	7.06” [179]	2.44” [62]	

Dimensions (Inches [mm])

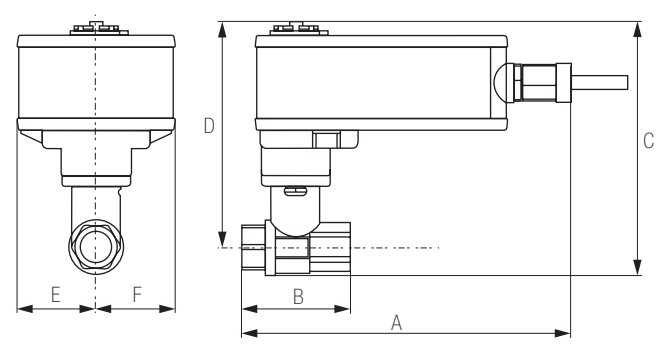

TFRB, TFRX

A	B	C	D	E	F
6.59” [167]	2.38” [60]	4.9” [124]	4.32” [110]	1.53” [38]	

Dimensions (Inches [mm])

LF

A	B	C	D	E	F
7.92” [201]	2.38” [60]	5.67” [144]	5.09” [129]	1.82” [46]	

Date created, 10/07/2016 - Subject to change. © Belimo Aircontrols (USA), Inc.

LRB24-3

On/Off, Floating Point, Non-Spring Return, 24 V

Technical Data	
Power Supply	24 VAC ± 20%, 50/60 Hz, 24 VDC ± 10%
Power Consumption Running	1.5 W
Power Consumption Holding	0.2 W
Transformer Sizing	2.5 VA (class 2 power source)
Electrical Connection	3ft [1m], 18 GA plenum cable with 1/2" conduit connector
Overload Protection	electronic thoughout 0° to 90° rotation
Input Impedance	600 Ω
Angle of Rotation	90°
Direction of Rotation (Motor)	reversible with built-in switch
Position Indication	integrated into handle
Manual Override	external push button
Running Time (Motor)	90 sec
Ambient Temperature Range	-22°F to 122°F [-30°C to 50°C]
Storage Temperature Range	-40°F to 176°F [-40°C to 80°C]
Housing	NEMA 2, IP54, UL enclosure type 2
Agency Listings†	cULus acc. to UL60730-1A/-2-14, CAN/CSA E60730-1:02, CE acc. to 2004/108/EC
Noise Level (Motor)	<35 dB (A)
Servicing	maintenance free
Quality Standard	ISO 9001

†Rated Impulse Voltage 800V, Type action 1.B , Control Pollution Degree 3.

Date created, 02/16/2017 - Subject to change. © Belimo Aircontrols (USA), Inc.

Wiring Diagrams

INSTALLATION NOTES

1. Provide overload protection and disconnect as required.
2. Actuators may be connected in parallel. Power consumption and input impedance must be observed.
3. Actuators may also be powered by 24 VDC.
6. Actuators Hot wire must be connected to the control board common. Only connect common to neg. (-) leg of control circuits. Terminal models (-T) have no-feedback.
18. Actuators with plenum cable do not have numbers; use color codes instead.

♦ Meets cULus requirements without the need of an electrical ground connection.

WARNING! LIVE ELECTRICAL COMPONENTS!

During installation, testing, servicing and troubleshooting of this product, it may be necessary to work with live electrical components. Have a qualified licensed electrician or other individual who has been properly trained in handling live electrical components perform these tasks. Failure to follow all electrical safety precautions when exposed to live electrical components could result in death or serious injury.

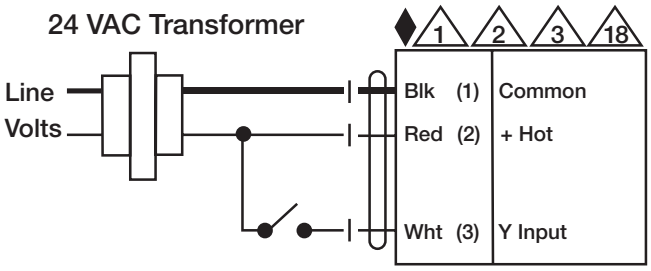

On/Off

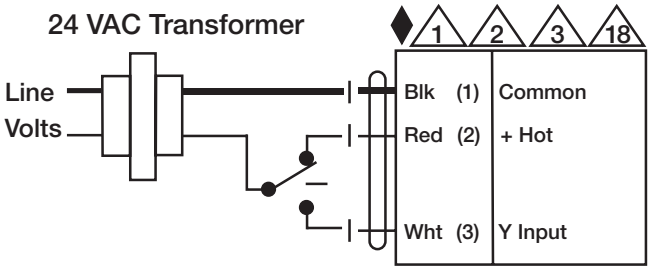

Floating Point

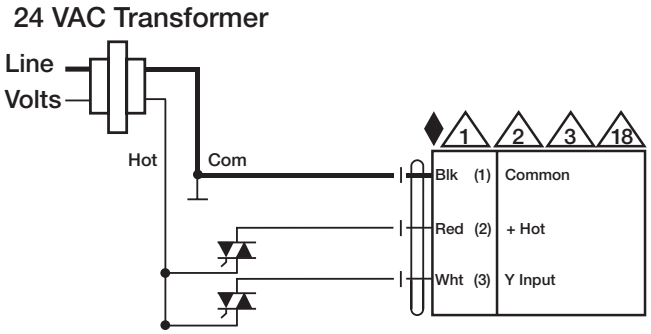

Floating Point - Triac Source

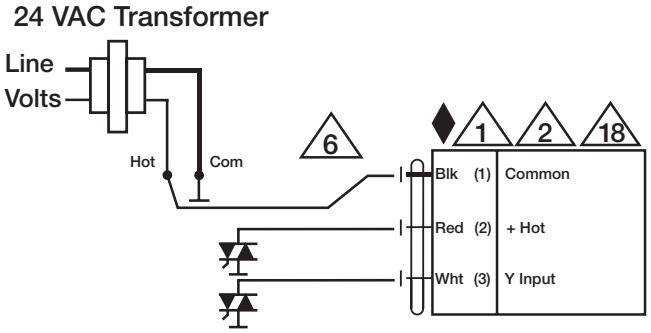

Floating Point - Triac Sink

Date created, 02/16/2017 - Subject to change. © Belimo Aircontrols (USA), Inc.