Differential Pressure Transducer Wet-to-Wet DP110 Series Product Bulletin

LIT-12013726

2021-05-13

Introduction

The Differential Pressure Transducer DP110 Series is Johnson Controls® high accuracy solution to monitor differential pressure in wet-to-wet applications. A single diaphragm design enables a true wet-to-wet differential pressure measurement with superior ±0.25% full-scale (FS) accuracy in comparison to competitive units, which uses two single-point pressure sensors to calculate differential pressure. The stainless steel capacitive sensor provides a highly accurate, linear analog output proportional to the pressure over a wide temperature range. The DP110 is offered with an optional 3-valve or 5-valve machined brass manifold for ease of installation and maintenance.

Figure 1: DP110 transducer

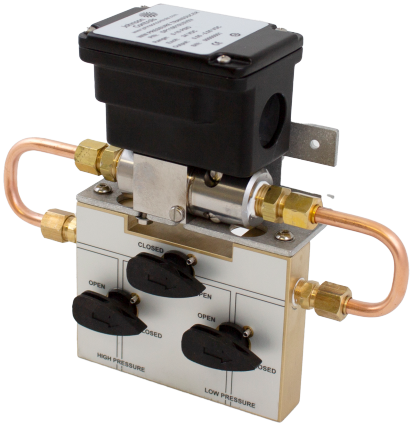

Applications

Use the Differential Pressure Transducer Wet-toWet DP110 Series in the following applications:

- Energy management systems
- Process control systems
- Flow measurement of various gases or liquids
- Liquid level measurement or pressurized vessels
- Pressure drop across filters

Features and benefits

The Differential Pressure Transducer DP110 has a single diaphragm sensor to avoid line pressure, with increased sensor response time, and saves money on time and installation. Features include:

- ±0.25% FS accuracy
- Available to 1 psid with 350 psi line pressure
- No liquid fill diaphragm
- NEMA 4 rated housing
- Low line pressure effect
- Fast response time
- Gas and liquid compatible
- CE and RoHS compliant

Single diaphragm sensor

The DP110 is a true wet-to-wet sensor with a single diaphragm construction. Line pressure does not impact the differential pressure range of a single diaphragm. Dual differential pressure sensors require the individual sensors to measure gauge pressure and compare the outputs to determine the differential pressure.

Sensor response time

The DP110 uses an all stainless steel capacitive sensor that responds 20x faster than oil-filled sensors. The sensor provides conditioned electronic circuitry with a highly accurate, linear analog output proportional to the pressure over a wide temperature range.

Cost-saving installation

When time and project costs are a priority, the DP110 offers an optional 3-valve or 5-valve machined brass manifold for ease of installation and maintenance. The brass body has no internal process connections and eliminates the risk of internal leaks.

Proof pressure specifications

Table 1: Unidirectional proof pressure

Pressure range (psid)	Proof pressure high side (psi)	Proof pressure low side (psi)
0 to 1.0	50	2.5
0 to 2.0	50	5
0 to 5.0	100	12.5
0 to 10.0	100	25
0 to 25.0	350	62.5
0 to 30.0	350	75
0 to 50.0	350	125
0 to 100.0	350	250

Table 2: Bidirectional proof pressure

Pressure range (psid)	Proof pressure high side (psi)	Proof pressure low side (psi)
0 to ±0.5	50	1.25
0 to ±1.0	50	2.5
0 to ±2.5	100	6.35
0 to ±5.0	100	12.5
0 to ±10.0	200	25
0 to ±25.0	350	62.5
0 to 50.0	350	125

Dimensions

The dimensions of the DP110 Transducer are shown in the following figures.

Figure 2: Dimensions of the DP110 Transducer, in. (mm)

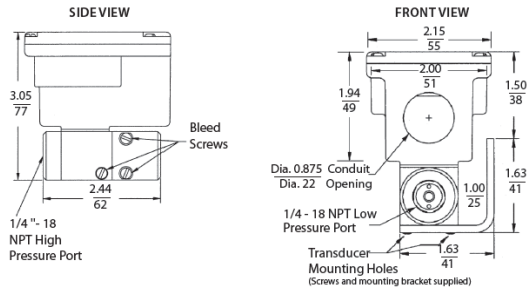

Figure 3: Mounting bracket dimensions, in. (mm)

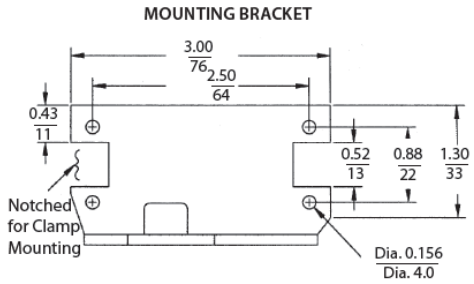

Dimensions of 3-valve manifold assembly

Figure 4: Optional 3-valve manifold assembly dimensions, in. (mm)

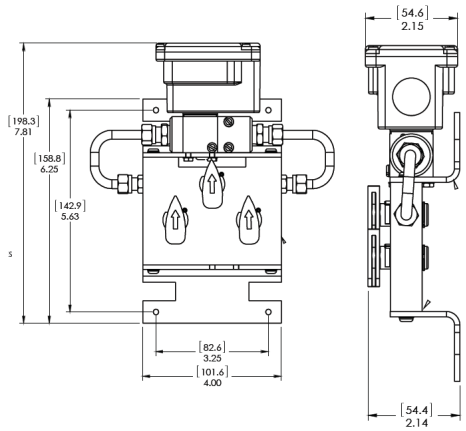

Figure 5: Optional 3-valve manifold assembly

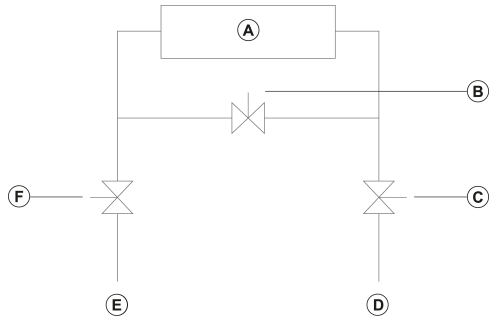

Callout	Description
A	DP110 Differential Pressure Transducer
B	V3 shunt valve
C	V2 shut-off valve
D	Low process, 1/4 in. NPT connection
E	High process, 1/4 in. NPT connection
F	V1 shut-off valve

For differential pressure measurements at high line pressure, maximum of 350 psig, install the pressure sensor with a valve in each line, and a shunt valve across the high and low reference pressure points as shown in Figure 5.

Dimensions of 5-valve manifold assembly

Figure 6: Optional 5-valve manifold assembly dimensions, in. (mm)

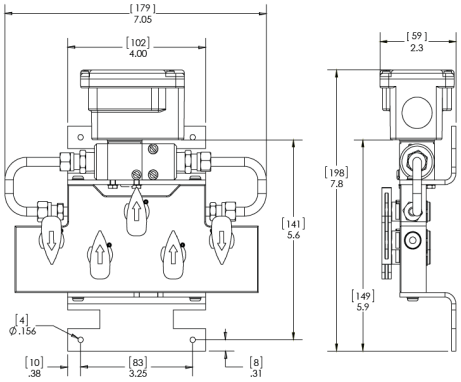

Figure 7: Optional 5-valve manifold assembly

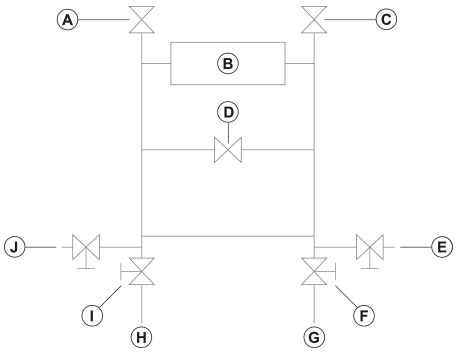

Callout	Description
A	V6 bleed valve. Optional or field-installed.
B	DP110 Differential Pressure Transducer
C	V7 bleed valve. Optional or field-installed.
D	V3 shunt valve
E	V5 low process or commission, 1/4 in. NPT connection
F	V2 shut-off valve
G	Low process 1/4 in. NPT connection
H	High process 1/4 in. NPT connection
I	V1 shut-off valve
J	V4 high process or commission, 1/4 in. NPT connection

For differential pressure measurements at high line pressure, maximum of 350 psig, install the pressure sensor with a valve in each line, and a shunt valve across the high and low reference pressure points as shown in Figure 7.

ⓘ **Note:** You do not require the V6 and V7 bleed valves when you use a DP110. Use the bleed screws on the DP110 to bleed the lines of air.

Ordering information

See the following table for ordering options for the DP110 Differential Pressure Transducers. For example, DP110005U2F4V is model DP110, 0 psid to 5 psid, unidirectional range, 1/4 in. NPT fitting, 4 mA to 20 mA output, and Viton seals.

Table 3: Product codes

Product code	Range, in psid	Direction	Fitting	Output	Bleed screw
DP110050U3V4V	0 to 50	Unidirectional	3-valve manifold	4 mA to 20 mA	Viton
DP110050U2F3V	0 to 50	Unidirectional	1/4 in. NPT	0.05 VDC to 10.05 VDC	Viton
DP110050U3V3V	0 to 50	Unidirectional	3-valve manifold	0.05 VDC to 10.05 VDC	Viton
DP110050U2F4V	0 to 50	Unidirectional	1/4 in. NPT	4 mA to 20 mA	Viton
DP110025U3V4V	0 to 25	Unidirectional	3-valve manifold	4 mA to 20 mA	Viton
DP110100U3V4V	0 to 100	Unidirectional	3-valve manifold	4 mA to 20 mA	Viton
DP110100U2F4V	0 to 100	Unidirectional	1/4 in. NPT	4 mA to 20 mA	Viton
DP110100U2F3V	0 to 100	Unidirectional	1/4 in. NPT	0.05 VDC to 10.05 VDC	Viton
DP110025U3V3V	0 to 25	Unidirectional	3-valve manifold	0.05 VDC to 10.05 VDC	Viton
DP110010U3V4V	0 to 10	Unidirectional	3-valve manifold	4 mA to 20 mA	Viton
DP110010U3V3V	0 to 10	Unidirectional	3-valve manifold	0.05 VDC to 10.05 VDC	Viton
DP110100U3V3V	0 to 100	Unidirectional	3-valve manifold	0.05 VDC to 10.05 VDC	Viton

Table 3: Product codes

Product code	Range, in psid	Direction	Fitting	Output	Bleed screw
DP110025U2F4V	0 to 25	Unidirectional	1/4 in. NPT	4 mA to 20 mA	Viton
DP110025U2F3V	0 to 25	Unidirectional	1/4 in. NPT	0.05 VDC to 10.05 VDC	Viton
DP110050B3V4V	±50	Bidirectional	3-valve manifold	4 mA to 20 mA	Viton
DP110005U3V4V	0 to 5	Unidirectional	3-valve manifold	4 mA to 20 mA	Viton
DP110010U2F4V	0 to 10	Unidirectional	1/4 in. NPT	4 mA to 20 mA	Viton
DP110010U2F3V	0 to 10	Unidirectional	1/4 in. NPT	0.05 VDC to 10.05 VDC	Viton
DP110025U5V4V	0 to 25	Unidirectional	5-valve manifold	4 mA to 20 mA	Viton
DP110050U5V3V	0 to 50	Unidirectional	5-valve manifold	0.05 VDC to 10.05 VDC	Viton
DP110005U2F3V	0 to 5	Unidirectional	1/4 in. NPT	0.05 VDC to 10.05 VDC	Viton
DP110005U2F4V	0 to 5	Unidirectional	1/4 in. NPT	4 mA to 20 mA	Viton
DP110050U5V4V	0 to 50	Unidirectional	5-valve manifold	4 mA to 20 mA	Viton
DP110050U3V2V	0 to 50	Unidirectional	3-valve manifold	0.05 VDC to 10.05 VDC	Viton
DP110001U3V4V	0 to 1	Unidirectional	3-valve manifold	4 mA to 20 mA	Viton
DP110025U2F2V	0 to 25	Unidirectional	1/4 in. NPT	0.05 VDC to 10.05 VDC	Viton
DP110050B3V3V	±50	Bidirectional	3-valve manifold	0.05 VDC to 10.05 VDC	Viton
DP110100U5V4V	0 to 100	Unidirectional	5-valve manifold	4 mA to 20 mA	Viton
DP110050U2F2V	0 to 50	Unidirectional	1/4 in. NPT	0.05 VDC to 10.05 VDC	Viton
DP110025B3V4V	±25	Bidirectional	3-valve manifold	4 mA to 20 mA	Viton
DP110005U3V3V	0 to 5	Unidirectional	3-valve manifold	0.05 VDC to 10.05 VDC	Viton
DP110050B2F4V	±50	Bidirectional	1/4 in. NPT	4 mA to 20 mA	Viton
DP110002U3V3V	0 to 2	Unidirectional	3-valve manifold	0.05 VDC to 10.05 VDC	Viton
DP110050B2F3V	±50	Bidirectional	1/4 in. NPT	0.05 VDC to 10.05 VDC	Viton
DP110100U5V3V	0 to 100	Unidirectional	1/4 in. NPT	0.05 VDC to 10.05 VDC	Viton
DP110100U2F2V	0 to 100	Unidirectional	3-valve manifold	0.05 VDC to 10.05 VDC	Viton
DP110025U3V2V	0 to 25	Unidirectional	3-valve manifold	0.05 VDC to 10.05 VDC	Viton
DP110025B2F4V	±25	Bidirectional	1/4 in. NPT	4 mA to 20 mA	Viton
DP110001U2F4V	0 to 1	Unidirectional	1/4 in. NPT	4 mA to 20 mA	Viton
DP110010U3V2V	0 to 10	Unidirectional	3-valve manifold	0.05 VDC to 10.05 VDC	Viton

Technical specifications

Table 4: Differential Pressure Transducer DP110 technical specifications

Description		Specification
Performance data	Accuracy RSS1, at constant temperature	±0.25% FS
	Non-linearity, BFSL	±0.20% FS
	Hysteresis	0.10% FS
	Non-repeatability	0.05% FS
Thermal effects ⓘ **Note:** Units are calibrated at nominal 70˚F. Maximum thermal error is calculated from this data.	Compensated range	30°F to 150°F (-1°C to +65)
	Zero shift % FS at 100°F (% FS at 50°C)	2.0 (1.8)
	Span shift % FS at 100°F (% FS at 50°C)	2.0 (1.8)
	Line pressure effect	Zero shift ±0.004% FS/PSIG line pressure
	Resolution	Infinite, limited only by output noise level, 0.02% FS
	Static acceleration effect	2% FS per g, most sensitive axis
	Natural frequency	500 Hz in gaseous media
	Warm-up shift	±0.1% FS total
	Response time	30 ms to 50 ms
	Long term stability	0.5% FS per year
	Maximum line pressure	350 psig
Environmental data	Operating temperature ⓘ **Note:** Operating temperature only limits the electronics. Pressure media temperatures may be considerably higher.	0°F to 175°F (-18°C to 80°C)
	Storage temperature	-65°F to 250°F (-54°C to 121°C)
	Vibration	5 g from 5 Hz to 500 Hz
	Acceleration	10 g
	Shock	50 g
Pressure media	Gases or liquids are compatible with 17-4 PH stainless steel, 300 Series Viton O-Rings. ⓘ **Note:** Do not use hydrogen with 17-4 PH stainless steel. Optional Buna-N O'rings are preferred for hydrocarbon applications.	
	3-valve and 5-valve manifold	
	Gases or liquids are compatible with 360 brass, Copper 122, Acetal plug valves, and Nitrile O-rings.	

Table 4: Differential Pressure Transducer DP110 technical specifications

Description		Specification
Physical specifications	Case	Stainless steel or aluminum
	Electrical connections	Barrier strip terminal block with conduit enclosure and 0.875 DIA conduit opening.
	Pressure fittings	1/4 - 18 NPT internal **Note:** With 1/4 in. NPT external fittings installed, does not include cavity volume of 1/4 in. NPT external fittings.
	Weight	14.4 oz
	Sensor cavity volume	0.27 in.^{3} positive port, 0.08 in.^{3} negative port
3-valve manifold assembly **Note:** Order assembled with the DP110 (Code 3V).	Manifold	Brass
	Valves, 3	V1 connects to the positive port V2 connects to the negative port V3 to equalizes pressure
	Valve type	90° On or Off
	Process connections	1/4 - 18 NPT internal thread
	Dimensions (H x W x D)	6.25 in. x 7.05 in. x 2.16 in.
	Weight	<2.5 lbs
5-valve manifold assembly **Note:** Order assembled with the DP110 (Code 5V).	Manifold	Brass
	Valves, 5	V1 connects to the positive port V2 connects to the negative port V3 equalizes pressure V4 and V5 connect to external gauge or alternate plumbing configuration
	Valve type	90° On or Off
	Process connections	1/4 - 18 NPT internal thread
	Dimensions (H x W x D)	6.25 in. x 7.05 in. x 2.16 in.
	Weight	<3.8 lbs
Electrical data, voltage	Circuit	3-wire: Exc, Out, Com
	Excitation	9 VDC to 30 VDC for 0 VDC to 5 VDC output, 13 VDC to 30 VDC for 0 VDC to 10 VDC output
	Output **Note:** Calibrated into a 50 K ohm load, operable into a 5K ohm load or greater	0 VDC to 5 VDC, 0 VDC to 10 VDC **Note:** Zero output factory set to within ±25 mV for 5 VDC output or ±50 mV for 10 VDC output. Span full-scale output factory set to ±25 mV for 5 VDC output or ± 50 mV for 10 VDC output.
	Output impendance	100 ohm

Table 4: Differential Pressure Transducer DP110 technical specifications

Description		Specification
Electrical data, current	Circuit	2-wire
	Output ⓘ **Note:** Calibrated at factory with a 24 VDC loop supply voltage and a 250 ohm load.	4 mA to 20mA ⓘ **Note:** Zero output factory set to within ±0.16 mA. Span factory set to within ±0.16 mA
	External load	0 ohm to 1 K ohm
	Minimum supply voltage, VDC	9 + 0.02 x (resistance of receiver plus line).
	Maximum supply voltage, VDC	30 + 0.004 x (resistance of receiver plus line)
Compliance CE	CE Mark - Johnson Controls declares that this product is in Compliance with the essential requirements and other relevant provisions of the EMC and RoHS Directives.	

The performance specifications are nominal and conform to acceptable industry standards. For application at conditions beyond these specifications, consult the local Johnson Controls office. Johnson Controls shall not be liable for damages resulting from misapplication or misuse of its products.

Product warranty

This product is covered by a limited warranty, details of which can be found at www.johnsoncontrols.com/buildingswarranty.

Software terms

Use of the software that is in (or constitutes) this product, or access to the cloud, or hosted services applicable to this product, if any, is subject to applicable end-user license, open-source software information, and other terms set forth at www.johnsoncontrols.com/techterms. Your use of this product constitutes an agreement to such terms.

Patents

Patents: https://jcipat.com

Single point of contact

APAC	Europe	NA/SA
JOHNSON CONTROLS C/O CONTROLS PRODUCT MANAGEMENT NO. 32 CHANGJIJANG RD NEW DISTRICT WUXI JIANGSU PROVINCE 214028 CHINA	JOHNSON CONTROLS WESTENDHOF 3 45143 ESSEN GERMANY	JOHNSON CONTROLS 507 E MICHIGAN ST MILWAUKEE WI 53202 USA

Contact information

Contact your local branch office: www.johnsoncontrols.com/locations
Contact Johnson Controls: www.johnsoncontrols.com/contact-us